radiomuseum.org: Eswe 2W

Sachsenwerk
ESWE 2W

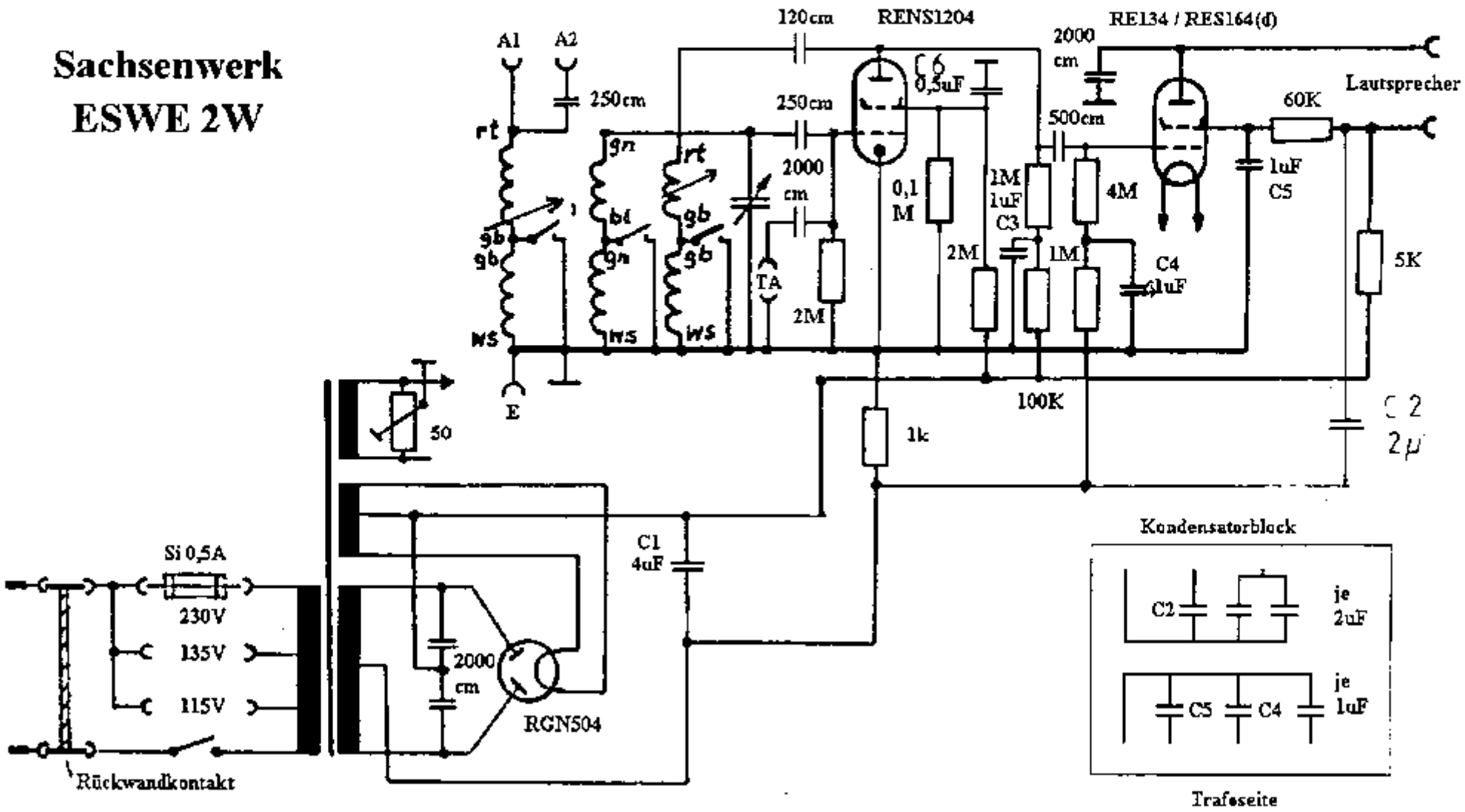

www.radiomuseum.org; uploaded by Arpad Kroth; downloaded by Darwski Lajtnert Sun Mar 30 00:12:31 CET 2014 (1697 x 3061, 864kb)